627 Amersale Drive
Naperville, IL 60563
Phone: (800) 323-5664
Fax: (630) 897-0573
sales@belson.com

Model # STS765BA **Instructions Sheet**

MINI-SHADE STRUCTURE BENCH ATTACHMENT ONLY

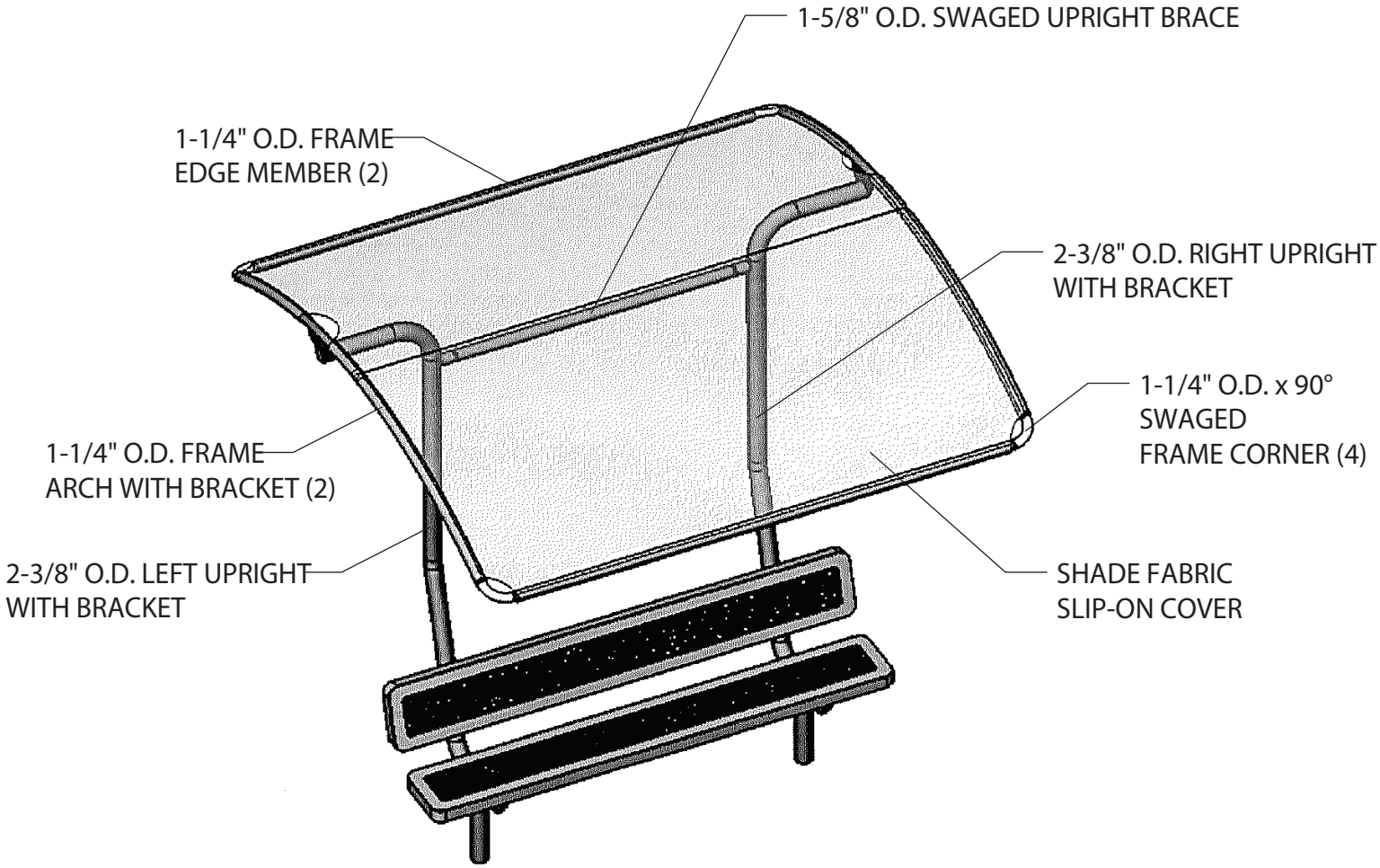

FRAME HARDWARE KIT INCLUDED

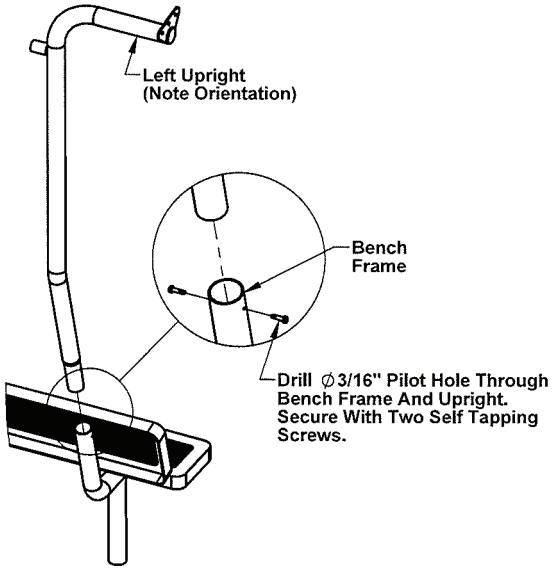
Left Upright
(Note Orientation)
Bench
Frame
Drill ∅3/16" Pilot Hole Through
Bench Frame And Upright.
Secure With Two Self Tapping
Screws.

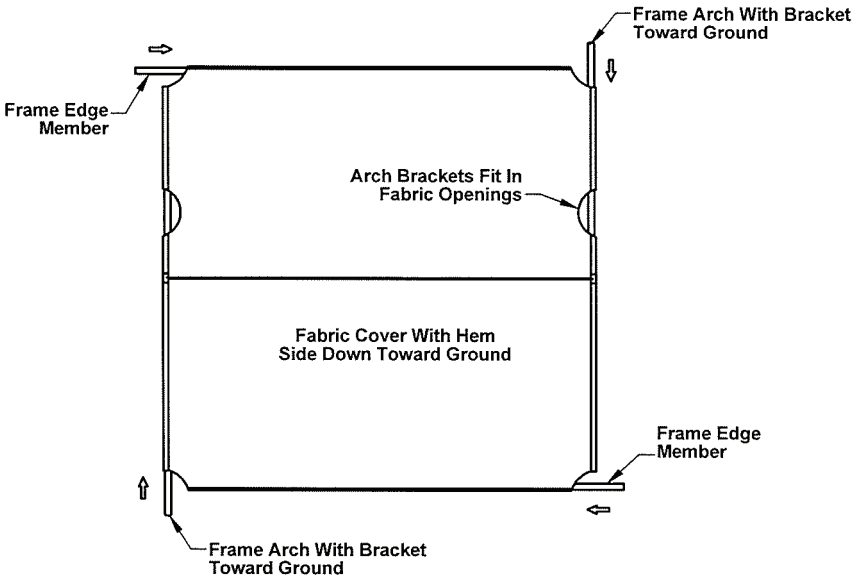
Frame Arch With Bracket
Toward Ground
Frame Edge
Member
Arch Brackets Fit In
Fabric Openings
Fabric Cover With Hem
Side Down Toward Ground
Frame Edge
Member
Frame Arch With Bracket
Toward Ground

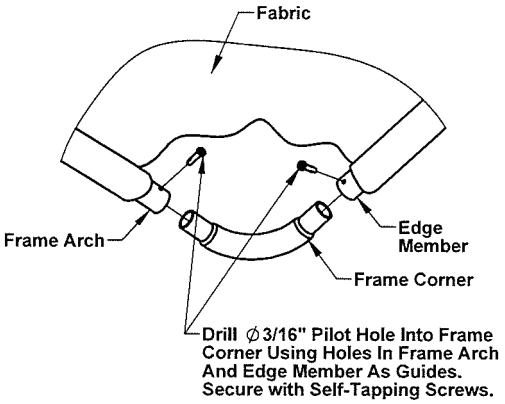
Fabric
Frame Arch
Edge
Member
Frame Corner
Drill ∅3/16" Pilot Hole Into Frame
Corner Using Holes In Frame Arch
And Edge Member As Guides.
Secure with Self-Tapping Screws.

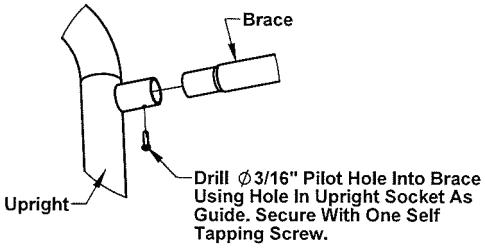
Brace
Upright
Drill ∅3/16" Pilot Hole Into Brace
Using Hole In Upright Socket As
Guide. Secure With One Self
Tapping Screw.

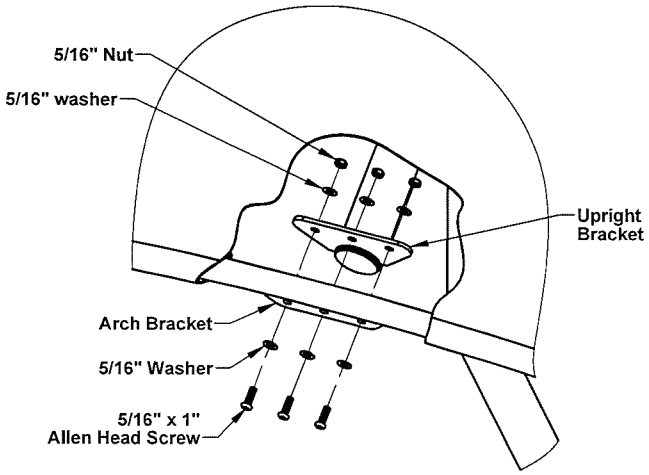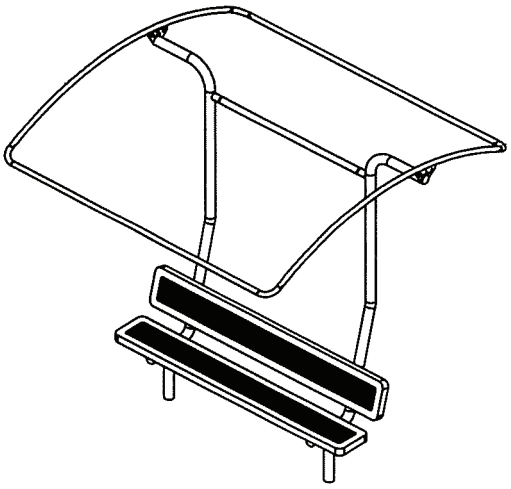
5/16" Nut
5/16" washer
Upright
Bracket
Arch Bracket
5/16" Washer
5/16" x 1"
Allen Head Screw